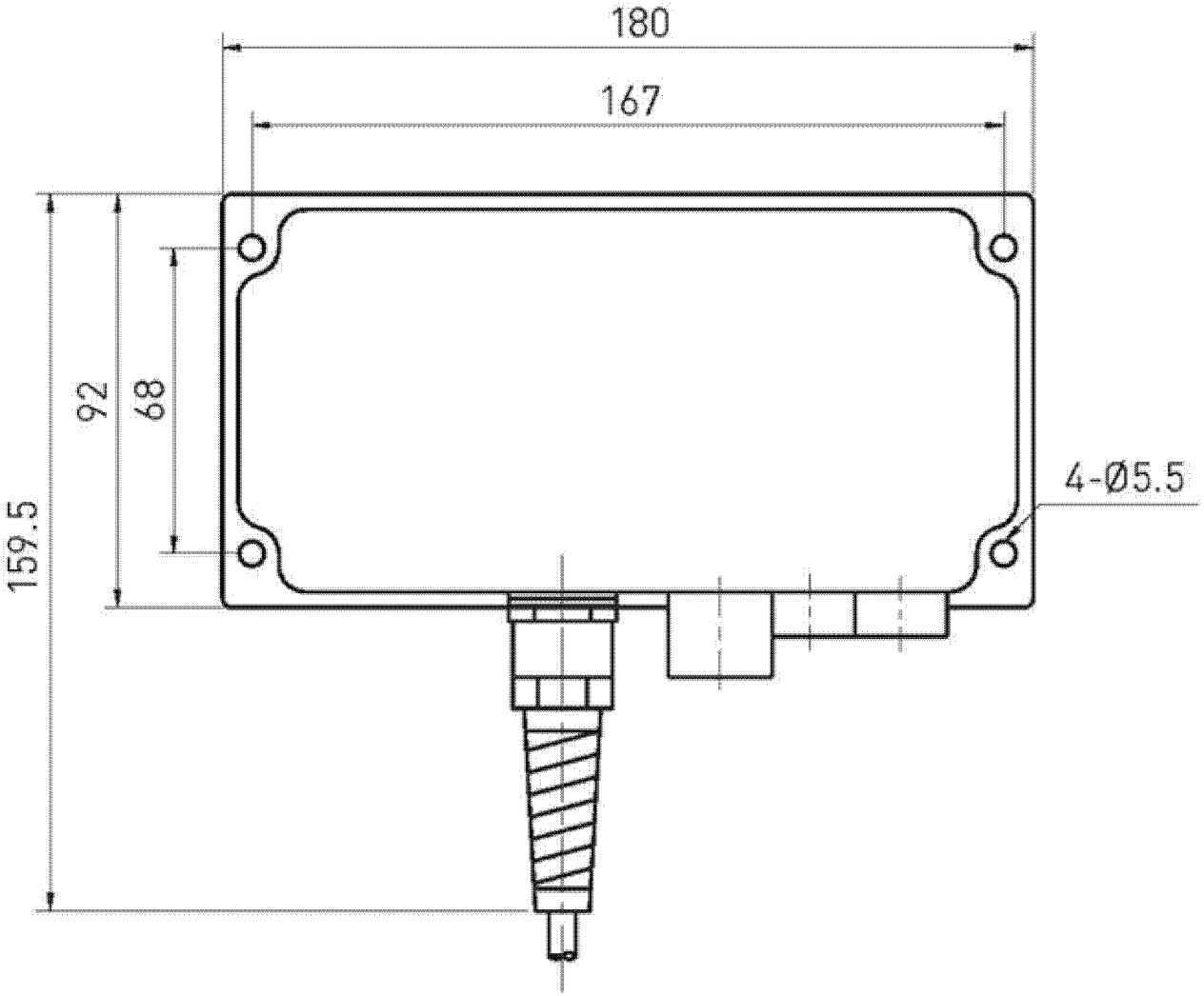
180
167
92
68
159.5
4-Ø5.5

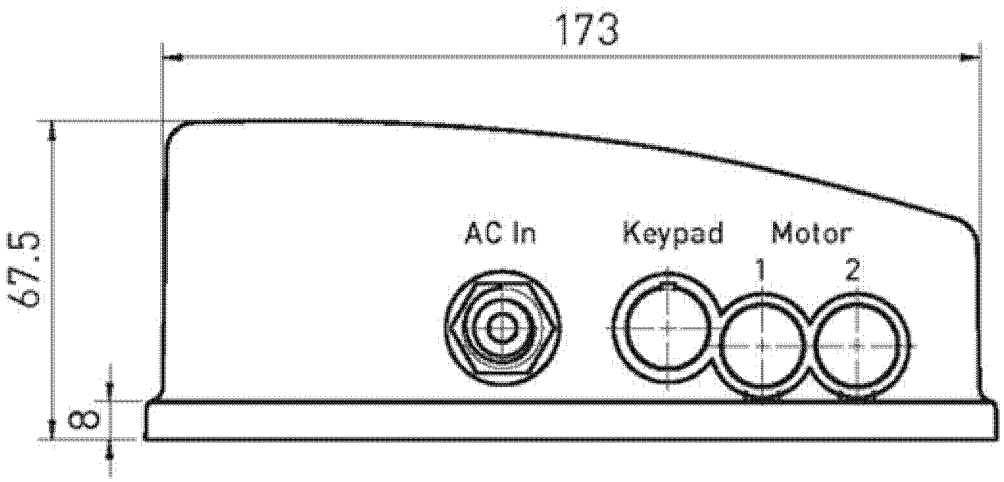
173
67.5
8
AC In
Keypad
Motor
1
2